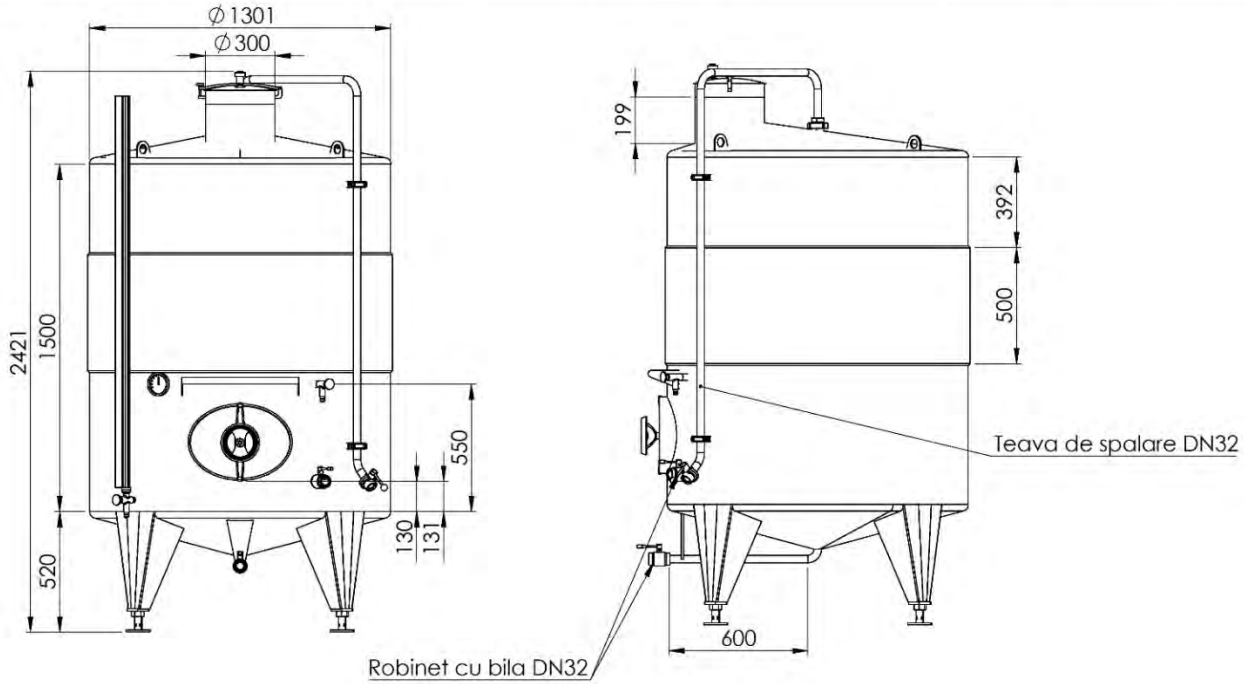



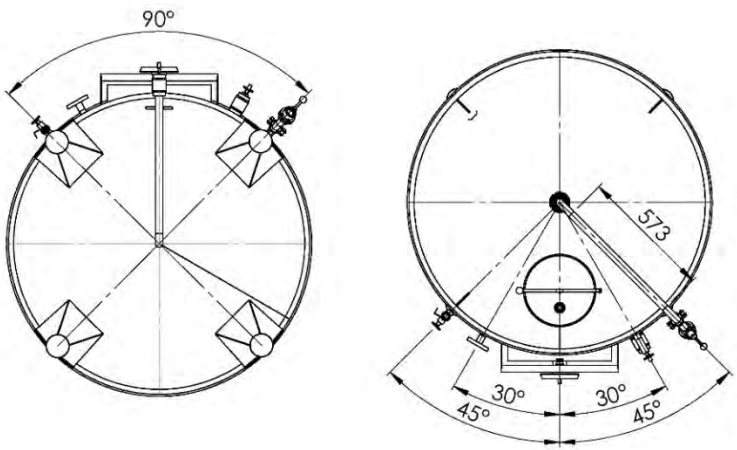

Without our permission, this drawing may not be reproduced, transferred or revised without our permission. If it is not to be made accessible to third parties, infringements will be prosecuted according to 1.17.18 UWG. All rights reserved according to 7.1 PatG.

Standards:
ISO 2768 mK
DIN 6784

MADENA engineering

MADENA-CONS S.R.L
MD-Chisinau, bd.Moscova 21,of. 609
Tel.: +37368120125
E-Mail: madenacons@gmail.com
Internet: www.madena.md

Rev.	Date	Created by	Audited
A	07-May-24	Mindicanu Dan	Balaban V.

Vas Fermentator 2000 litri

Sadova Vin

Sheet

Material:
Paint:
Mass:
Document status:
Scale: 1:50
A3